SNACK4

CO-PACKING & PRIVATE LABEL

ABOUT US

SNACK4 | CO-PACKING & PRIVATE LABEL

SNACK4 helps brands turn ideas into market-ready products.

We develop, manufacture and pack food products, offering Co-Packing, Private Label, Handling and Bundling solutions tailored to each project.

We combine technology, production capacity and expertise to efficiently meet challenges of all sizes. We manufacture to stringent food safety standards and hold certifications for organic, gluten-free and vegan production, in accordance with HACCP and IFS.

Discover how we can help bring your next product to life.

PRODUCT TYPES:



LIQUIDS



PASTES



POWDERS



GRANULES



SOLIDS



CAPSULES

Brands that trust SNACK4

PROZIS

Cerealis

Science4you

BEAN TO BAR
ALMA DO CACAU
BACK TO THE ORIGINS
TRUE COCOA
HANDCRAFTED CHOCOLATE

Frutorra

TARWI
Organic snacks. For good.

Arcádia
1933

zumub

yogoody

PG
PANGITER

EQUANTO

benefeat.

URBAN FOODS

simple.

Barkyn

WHAT WE DO

NUTRITION & SUPPLEMENTS | OUR FACTORY. YOUR BRAND.

SNACK4 develops and manufactures food supplements for leading brands such as Prozis and Zumub, meeting high standards of quality, food safety and production capacity.

CATEGORIES:

- Protein
- Creatine
- Melatonin
- Probiotics
- Prebiotics
- Other functional ingredients



WHAT WE DO

CO-PACKING | OUR FACTORY. YOUR BRAND.

PORTUGAL'S LARGEST MACHINERY RANGE



WHAT WE DO

PRIVATE LABEL | OUR FACTORY. YOUR BRAND.

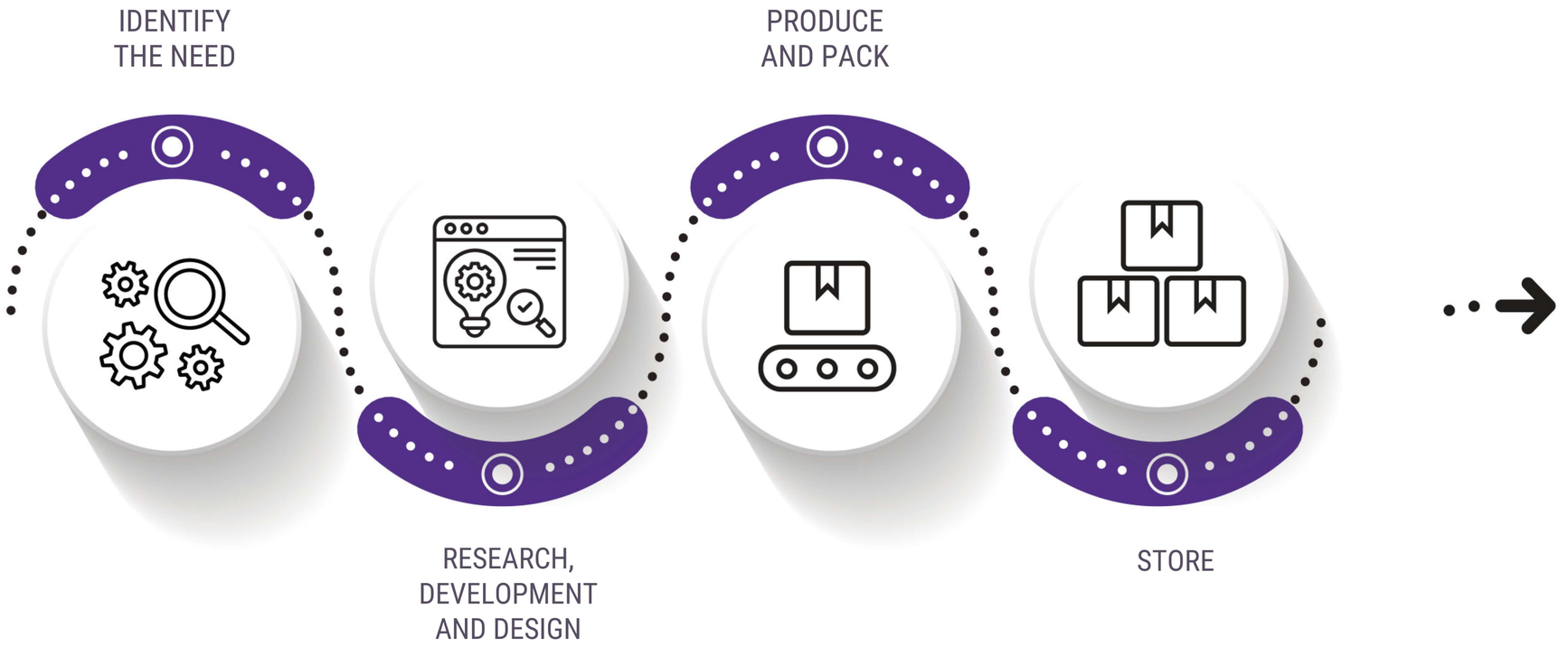

WHAT WE DO

HANDLING & BUNDLING | OUR FACTORY. YOUR BRAND.



WHAT WE DO

HANDLING & BUNDLING | OUR FACTORY. YOUR BRAND.

IMAGES FOR ILLUSTRATIVE PURPOSES ONLY











SNACK4 IS AN AUTHORISED EXCISE WAREHOUSE FOR RECEIVING WINE

WHAT WE DO

WAREHOUSING | OUR WAREHOUSE. YOUR GOODS.

- • Receipt of your raw materials and auxiliary materials;
- • Storage of your raw materials and auxiliary materials;
- • Storage of finished products;
- • Preparation and dispatch of orders to your customers.

* Warehouse with capacity for 500 pallets









EQUIPMENT WE USE

OFFICIAL DISTRIBUTOR: PACK4 EMPOWERING INDUSTRY



MIXING



EXTRUSION



COUNTING

CAPSULES



DOYPACK FILLING AND SEALING



DOSING, FILLING AND SEALING

PILLOW BAG | BLOCK BOTTOM
GUSSETED BAG | STABILO



FLOW WRAPPING



SEALING

RECTANGULAR TINS

IMAGES FOR ILLUSTRATIVE PURPOSES ONLY

EQUIPMENT WE USE

OFFICIAL DISTRIBUTOR: PACK4 EMPOWERING INDUSTRY



LABELLING AND CODING

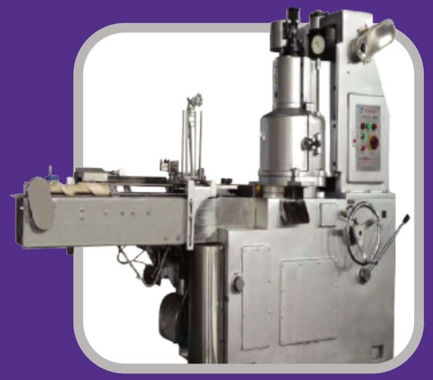

SEALING

ROUND TINS



PASTEURISATION SYSTEM



INSPECTION SYSTEMS

X-RAY | WEIGHT | METAL FOREIGN BODIES



END-OF-LINE SYSTEMS

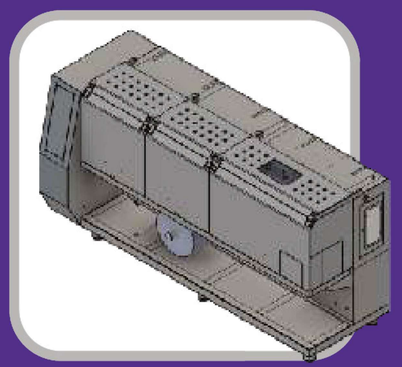

STICK PACK MACHINE



SACHET MACHINE

IMAGES FOR ILLUSTRATIVE PURPOSES ONLY

SNACK4

CO-PACKING & PRIVATE LABEL

geral@snack4.pt

+351 223 238 545

Rua de Ferronho 95, 4475-703 Maia